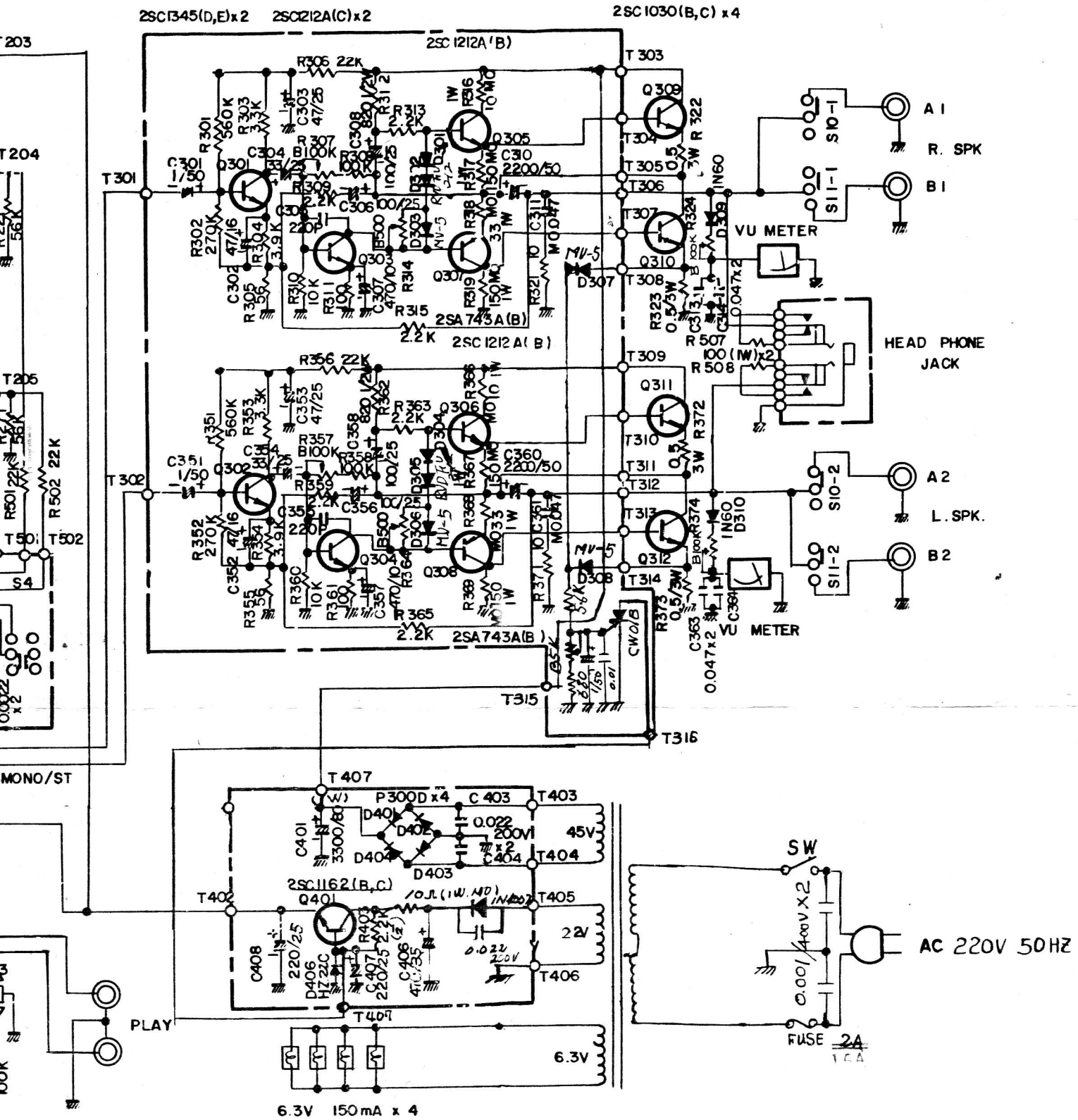

SCHEMATIC DIAGRAM FOR MODEL ID-340