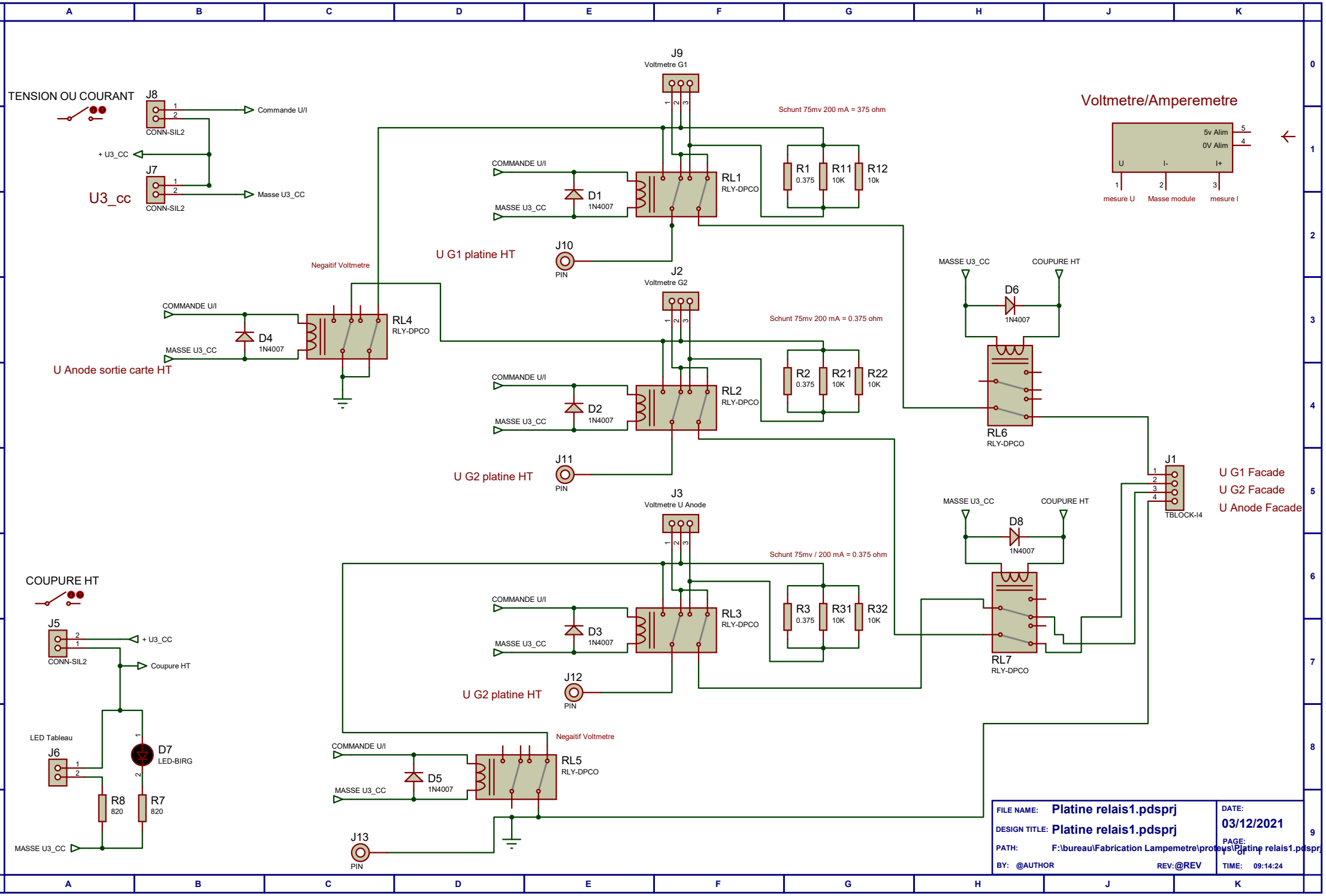
TENSION OU COURANT
J8
CONN-SIL2
Commande U/I
+ U3_CC
J7
CONN-SIL2
Masse U3_CC
U3_cc
J9
Voltmetre G1
Schunt 75mv 200 mA = 375 ohm
COMMANDE U/I
MASSE U3_CC
D1
1N4007
RL1
RLY-DPCO
R1
0.375
R11
10K
R12
10k
J10
PIN
U G1 platine HT
Negaitif Voltmetre
COMMANDE U/I
MASSE U3_CC
D4
1N4007
RL4
RLY-DPCO
U Anode sortie carte HT
J2
Voltmetre G2
Schunt 75mv 200 mA = 0.375 ohm
COMMANDE U/I
MASSE U3_CC
D2
1N4007
RL2
RLY-DPCO
R2
0.375
R21
10K
R22
10K
J11
PIN
U G2 platine HT
J3
Voltmetre U Anode
Schunt 75mv / 200 mA = 0.375 ohm
COMMANDE U/I
MASSE U3_CC
D3
1N4007
RL3
RLY-DPCO
R3
0.375
R31
10K
R32
10K
J12
PIN
U G2 platine HT
Negaitif Voltmetre
COMMANDE U/I
MASSE U3_CC
D5
1N4007
RL5
RLY-DPCO
J13
PIN
Voltmetre/Amperemetre
5v Alim
0V Alim
U
I-
I+
mesure U
Masse module
mesure I
MASSE U3_CC
COUPURE HT
D6
1N4007
RL6
RLY-DPCO
MASSE U3_CC
COUPURE HT
D8
1N4007
RL7
RLY-DPCO
J1
TBLOCK-I4
U G1 Facade
U G2 Facade
U Anode Facade
COUPURE HT
J5
CONN-SIL2
+ U3_CC
Coupure HT
LED Tableau
J6
D7
LED-BIRG
R8
820
R7
820
MASSE U3_CC
FILE NAME: Platine relais1.pdsprj
DESIGN TITLE: Platine relais1.pdsprj
PATH: F:\bureau\Fabrication Lampemetre\proteus\Platine relais1.pdsprj
BY: @AUTHOR
REV:@REV
DATE: 03/12/2021
PAGE: 1 of 1
TIME: 09:14:24