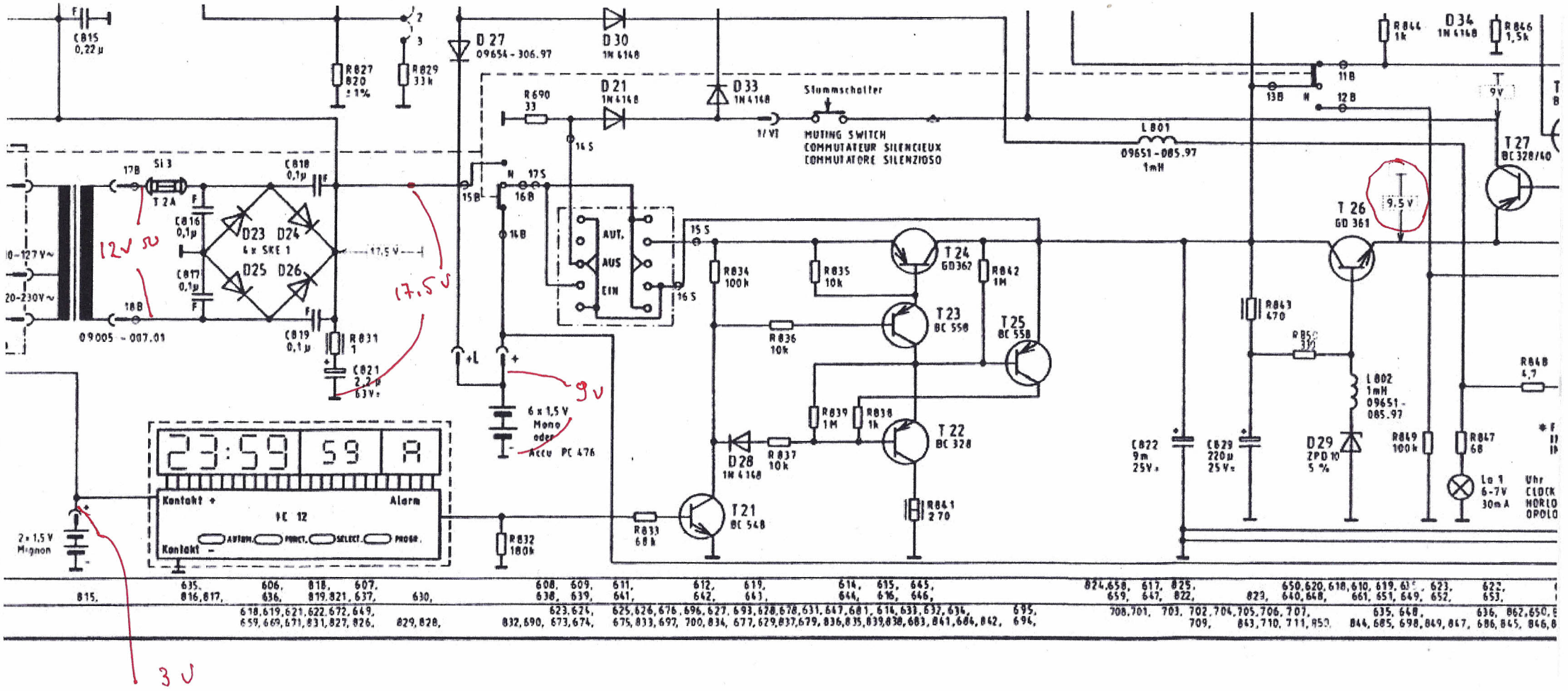

C815 0,22µ
R827 820 ±1%
R829 33k
D27 09654-306.97
D30 1N4148
D21 1N4148
D33 1N4148
R690 33
Stummschalter
MUTING SWITCH
COMMUTATEUR SILENCIEUX
COMMUTATORE SILENZIOSO
L801 09651-085.97 1mH
R844 1k
D34 1N4148
R846 1,5k
T27 BC328/40
T26 GD361
9,5V
9V
Si3 T2A
C818 0,1µ
C816 0,1µ
C817 0,1µ
D23 D24 D25 D26
4x SKE 1
17,5V
C819 0,1µ
R831 1
C821 2,2µ 63V
09005-007.01
12V
17,5V
9V
6x1,5V Mono oder Accu PC 476
AUT. AUS EIN
R834 100k
R835 10k
T24 GD362
R842 1M
T23 BC558
T25 BC558
R836 10k
R839 1M
R838 1k
T22 BC328
D28 1N4148
R837 10k
R841 270
T21 BC548
R833 68k
R832 180k
R843 470
L802 1mH 09651-085.97
D29 ZPD10 5%
C822 9m 25V
C829 220µ 25V
R849 100k
R847 68
R848 4,7
La 1 6-7V 30mA
Uhr CLOCK HORLO OPOLO
23:59 59 A
Kontakt +
Alarm
IC 12
AUTOM. FUNCT. SELECT. PROGR.
Kontakt -
2x1,5V Mignon
3V