HiFi ENGINE®

For more Hi-Fi manuals and set-up information
please visit www.hifiengine.com

Technics Model SA-300/SA-300K (This schematic diagram may be modified at any time with the development of new technology)

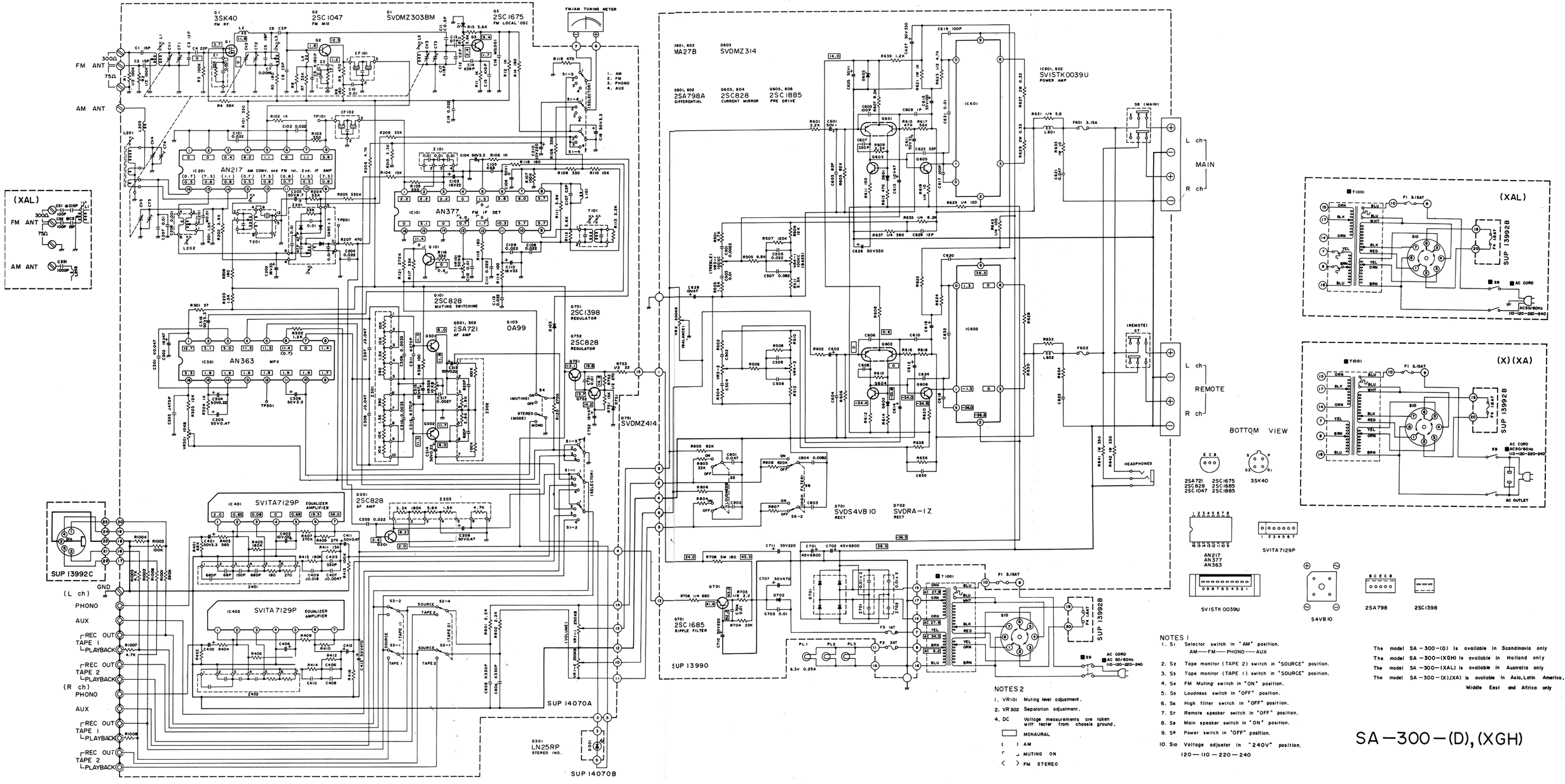

NOTES 1

1. S1 Selector switch in "AM" position.
   AM — FM — PHONO — AUX
2. S2 Tape monitor (TAPE 2) switch in "SOURCE" position.
3. S3 Tape monitor (TAPE 1) switch in "SOURCE" position.
4. S4 FM Muting switch in "ON" position.
5. S5 Loudness switch in "OFF" position.
6. S6 High filter switch in "OFF" position.
7. S7 Remote speaker switch in "OFF" position.
8. S8 Main speaker switch in "ON" position.
9. S9 Power switch in "OFF" position.
10. S10 Voltage adjustor in "240V" position.
    120 — 110 — 220 — 240

NOTES 2

1. VR101 Muting level adjustment.
2. VR302 Separation adjustment.
4. DC Voltage measurements are taken with tester from chassis ground.

▭ MONAURAL
( ) AM
⌐ ⌙ MUTING ON
< > FM STEREO

The model SA-300-(D) is available in Scandinavia only
The model SA-300-(XGH) is available in Holland only
The model SA-300-(XAL) is available in Australia only
The model SA-300-(X),(XA) is available in Asia, Latin America, Middle East and Africa only

SA-300-(D), (XGH)