608
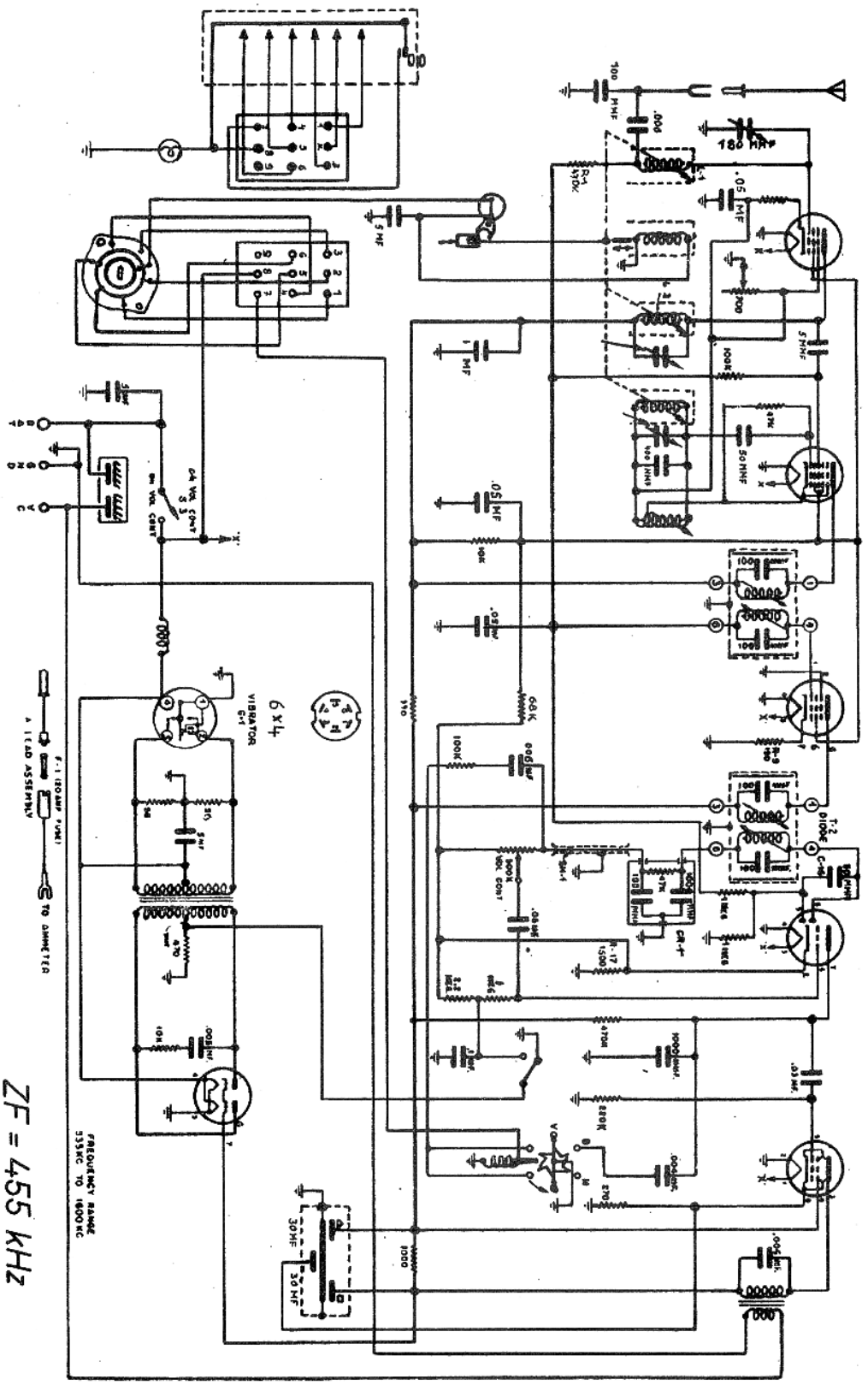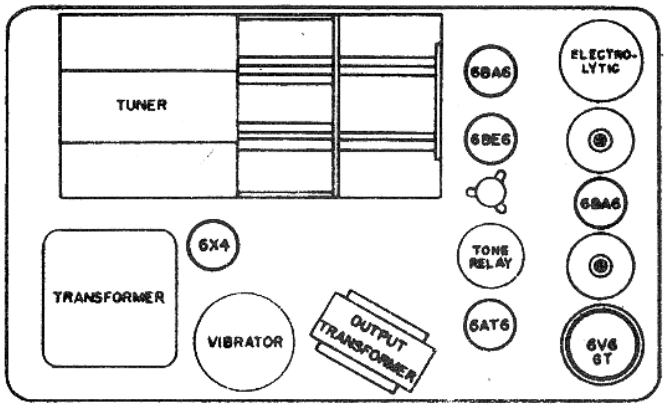
MOTOROLA